FITTING INSTRUCTIONS

Ford Ranger Factory-Style Auxiliary Switch

Ford Ranger 2012-2022 | Replaces the jellyfish (cargo lamp) switch | No drilling or cutting

IN THE BOX

Switch only: AutoVolt switch, pre-wired and terminated, and the AutoVolt adapter.
Switch and control relay: AutoVolt switch, pre-wired and terminated, the AutoVolt adapter, control relay module and fuse tap with a 5A fuse.
Main power relay not included. Most light bars come with a loom and relay that does this job.

FITTING

1 Open the fuse box cover.

2 Firmly pull the headlamp switch panel, which houses the jellyfish switch, towards you to release it.

3 Pop out the original jellyfish switch and tuck it somewhere out of the way. **Leave it connected** so the factory circuit is not upset.

4 Push the AutoVolt adapter into the switch hole. **Make sure the AutoVolt text is at the top**, otherwise the switch tabs will not locate into place properly.

5 Push your new switch into the adapter.

6 Wire the switch using whichever diagram on pages 2 and 3 suits your project, test it, then refit the headlamp switch panel and fuse box cover.

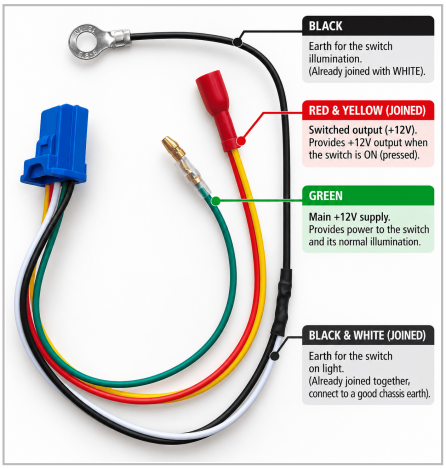

Your switch lead as supplied

TIP: When refitting the headlamp switch panel, removing the heater vent panel first gives you more room. It comes off the same way, pull it firmly towards you to release it.

AutoVolt Solutions Ltd | 07849 860623 | autovoltsolutions@yahoo.com | 12 month limited warranty
Designed and built by AutoVolt Solutions Ltd in Northern Ireland

WIRING DIAGRAMS

Choose the one that suits your project

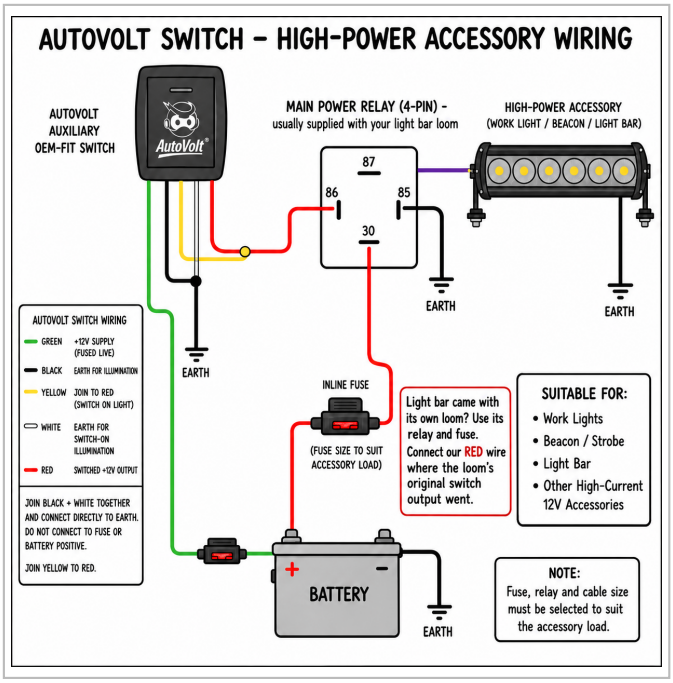

Diagram 1 | Switch only, high-power accessory

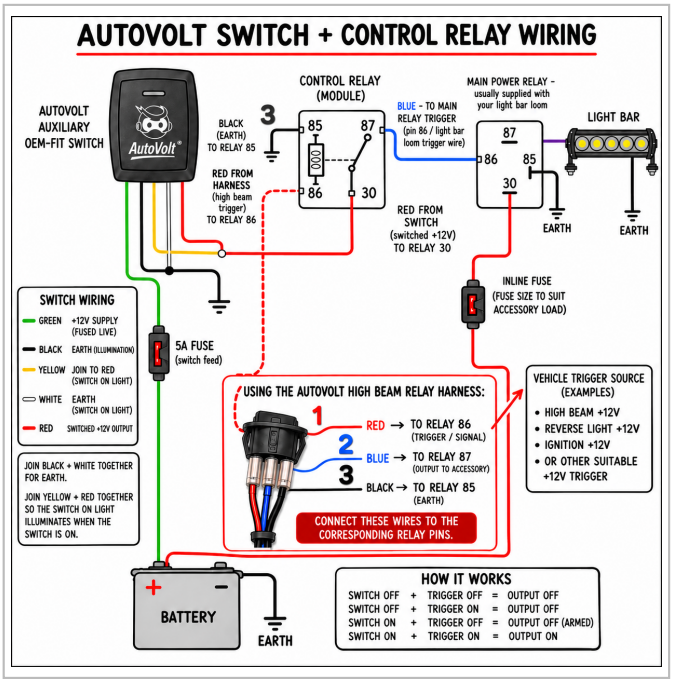

Diagram 2 | Switch with control relay

FITTING WITH A LIGHT BAR

- **Light bar with its own loom:** keep its relay and fuse, they do the main relay job. Use our switch in place of the one supplied with the loom. No loom? You will need a standard 12V relay kit with a fuse to suit your light bar.
- **Switch only (Diagram 1):** connect our RED to the trigger wire on your light bar loom, where the original switch output went. The light bar comes on with the switch.
- **Switch and high beam (Diagram 2):** RED from the switch goes to control relay pin 30, and BLUE from pin 87 goes to the trigger wire on your light bar loom. The light bar then only comes on with your high beams, and only when the switch is on.
- **Loom with no switch, just a trigger wire?** See page 3.
- **Power for the switch:** use the supplied fuse tap in the interior fuse box to feed GREEN, instead of running a fused wire to the battery. The fuse box sits just below the switch.
- **High beam relay harness:** the harness shown in Diagram 2 is sold separately. Any suitable +12V trigger, such as reverse or ignition, can go to pin 86 instead.

This is a control switch, not a power switch. High current accessories must be powered through a correctly rated relay, fuse and cable. Fuse the GREEN feed at 5A maximum, and always lower than the fuse of the circuit you tap into. The blue backlight is lit whenever GREEN has power, so use an ignition-switched feed if you want it to go off with the vehicle.

AutoVolt Solutions Ltd | 07849 860623 | autovoltsolutions@yahoo.com | 12 month limited warranty
Designed and built by AutoVolt Solutions Ltd in Northern Ireland

LIGHT BAR LOOM WITH JUST A TRIGGER WIRE?

Some light bar looms come with a relay, a fuse and a single trigger wire, but **no switch**. Keep that loom exactly as supplied. Its relay does the main relay job, so you do not need another one.

Switch only: connect our RED to the trigger wire on your loom. The light bar comes on with the switch. This is Diagram 1, with your loom's relay as the main power relay.
Switch and high beam: use the control relay as shown in Diagram 3 below. RED from the switch goes to control relay pin 30, and BLUE from pin 87 goes to the trigger wire on your loom. The light bar then only comes on with your high beams, and only when the switch is on.

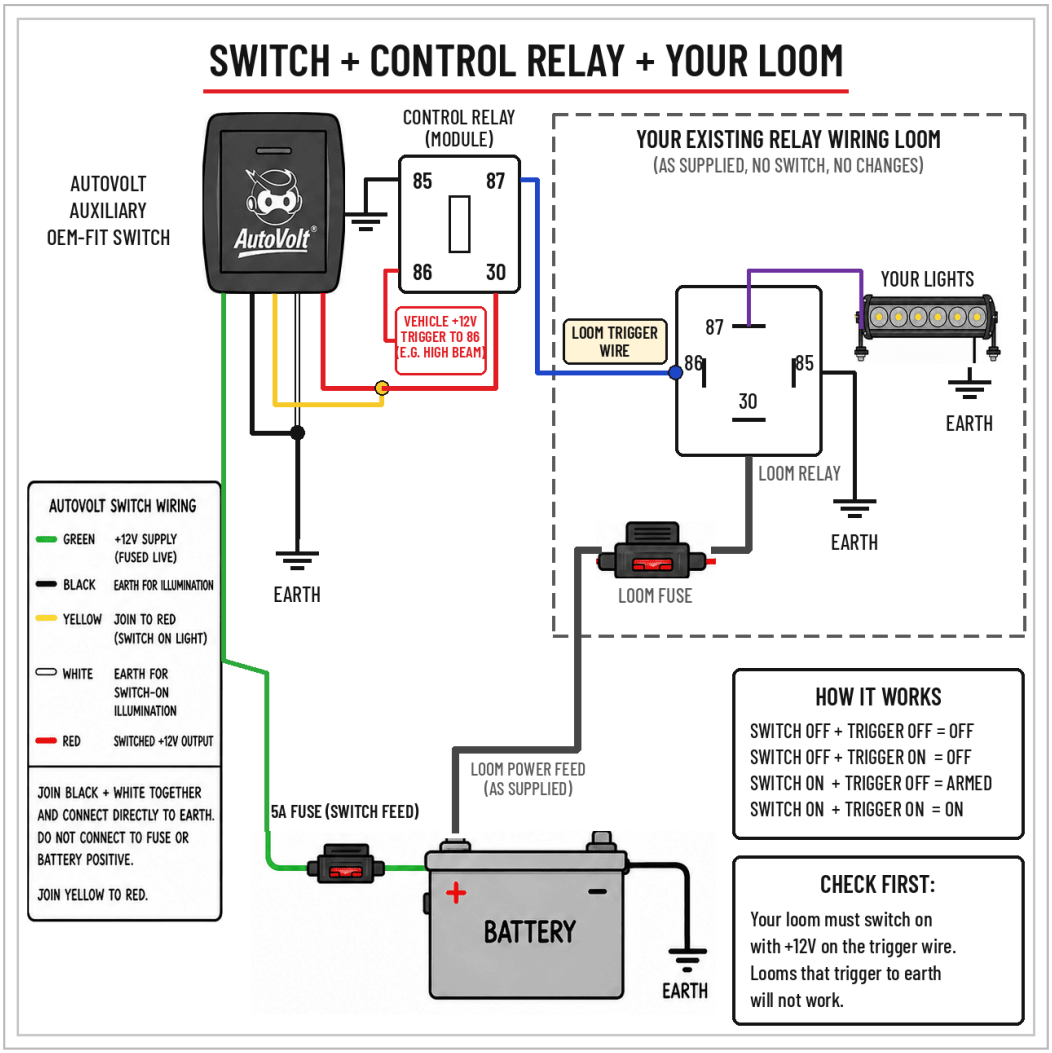

Diagram 3 | Switch with control relay and a trigger-wire loom

Check first: your loom must switch on with +12V on the trigger wire. Looms that switch on by connecting the trigger wire to earth will not work with this switch.